TECHNICAL DRAWING

DAD1039

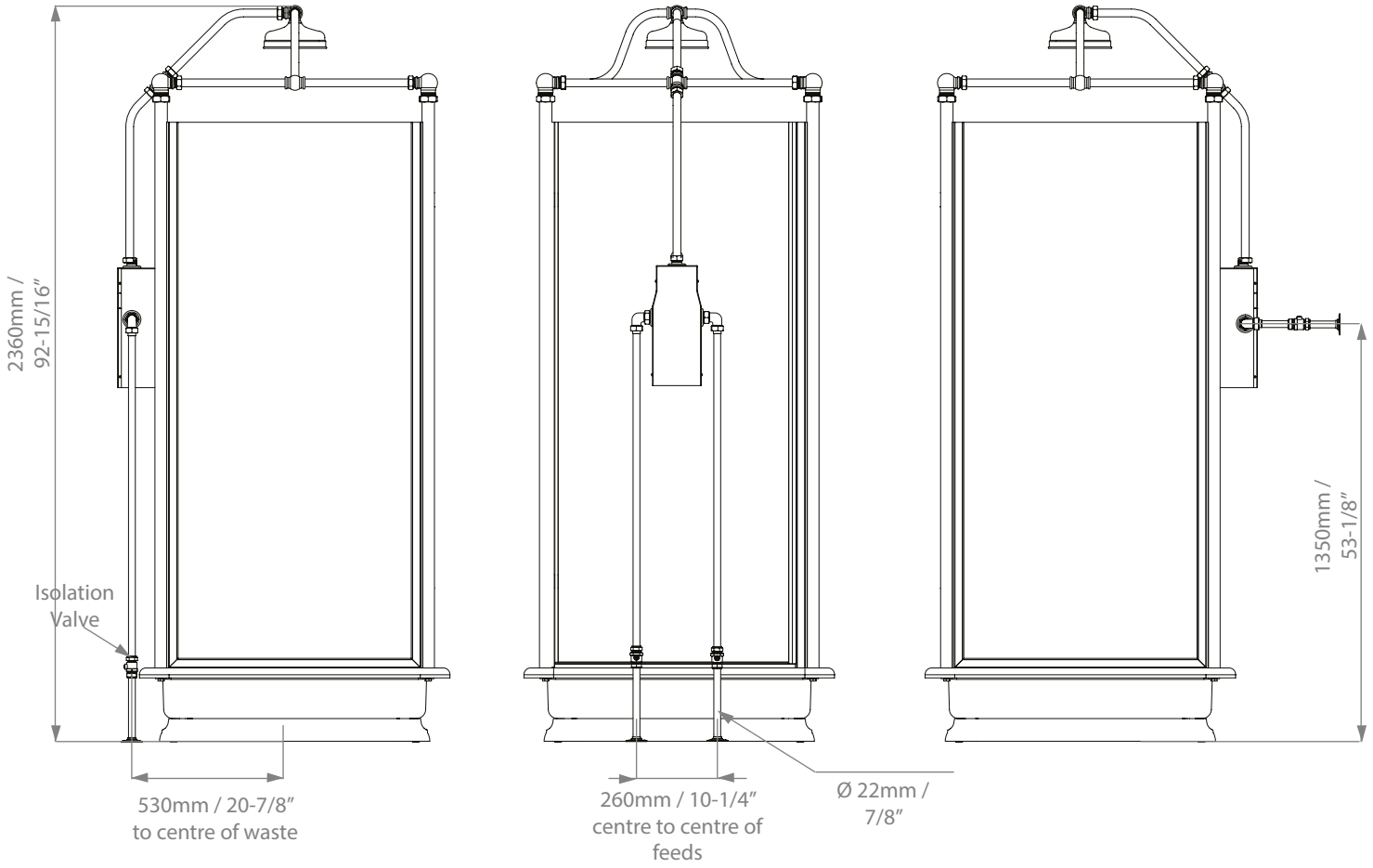

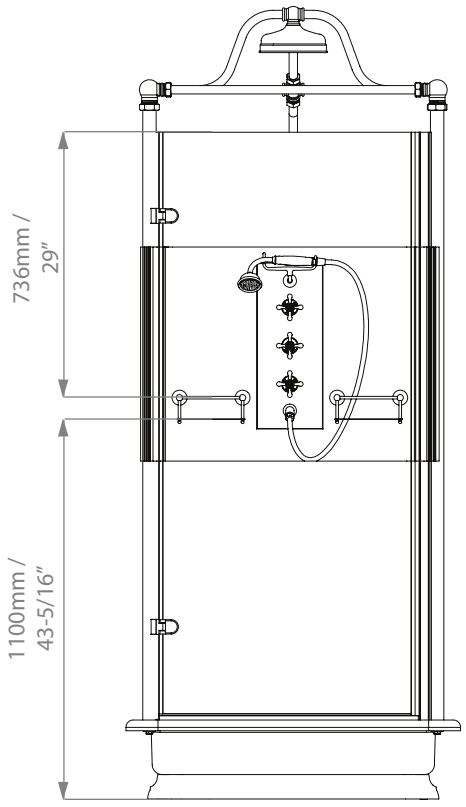

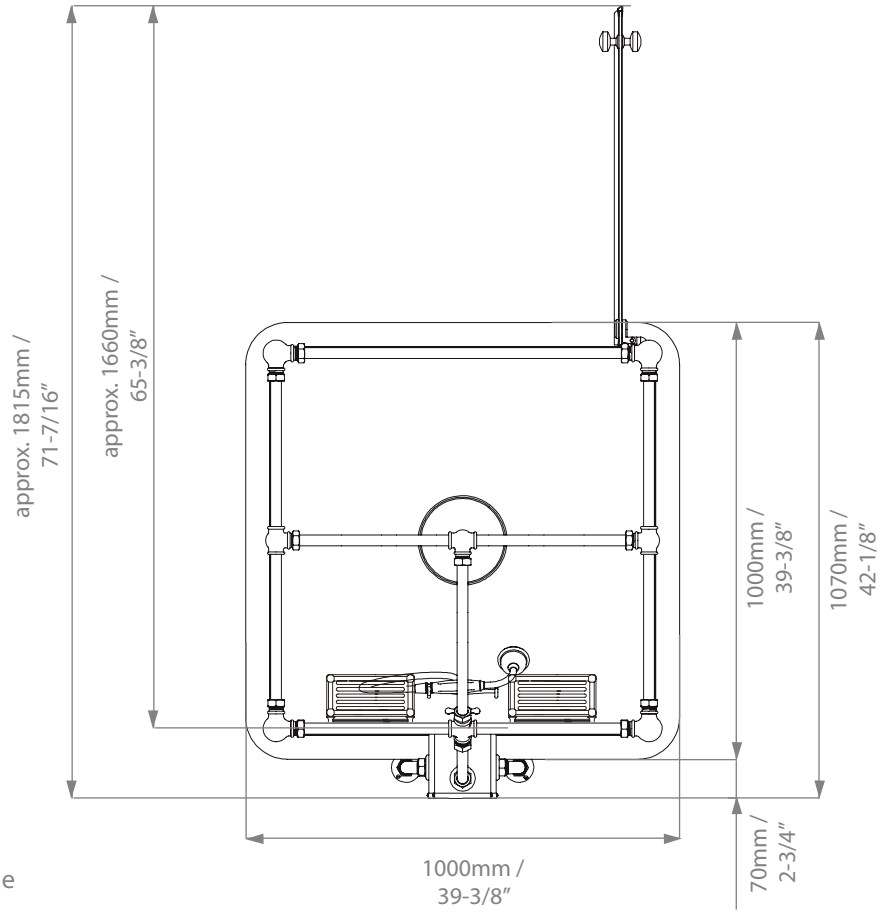

Standing height from inside if shower tray to top of frame approx. 2025mm / 79-3/4″
NOTE: Shower is subject to vary in size up to 5%

UK Feed

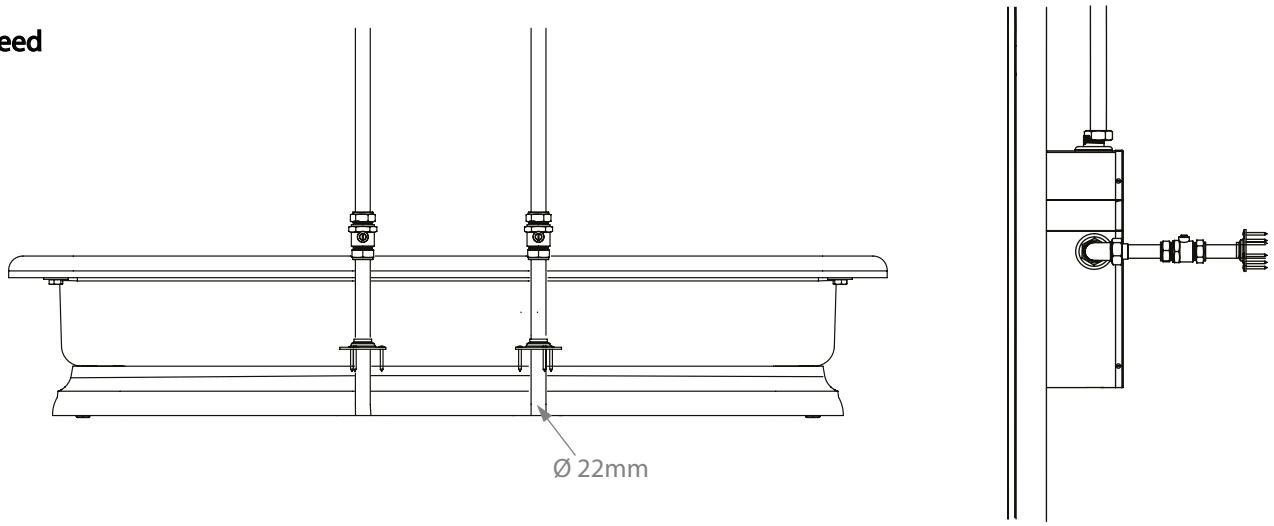

US Feed

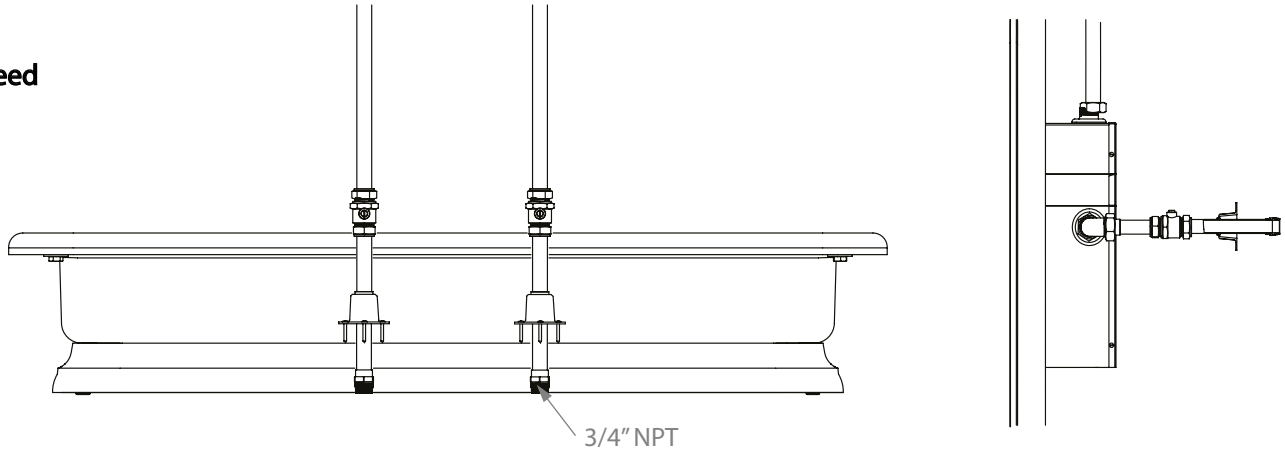

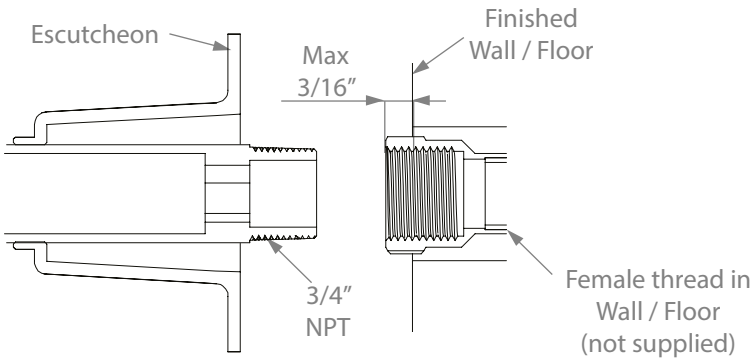

DOOR POSITION OPTIONS

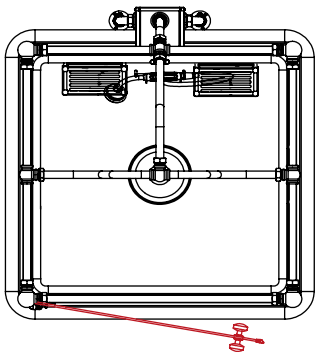

Option 1:
Door hinged on left

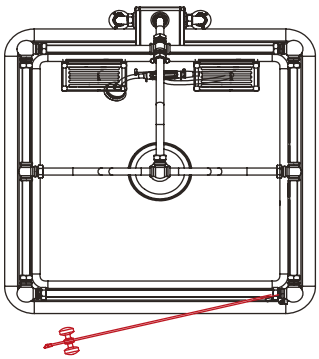

Option 2:
Door hinged on right

SHOWER TRAY AND WASTE

DAD1039

SECTION VIEW

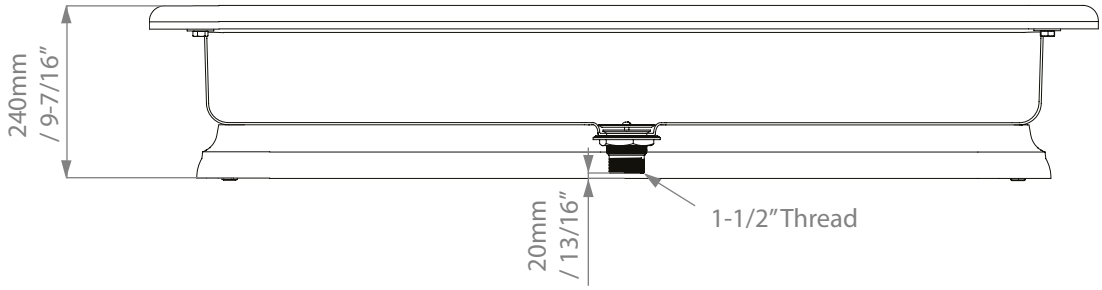

UK VERSION

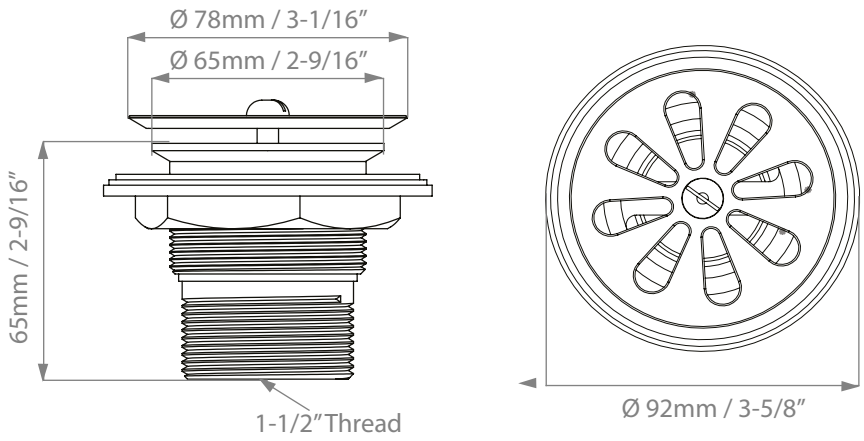

US VERSION

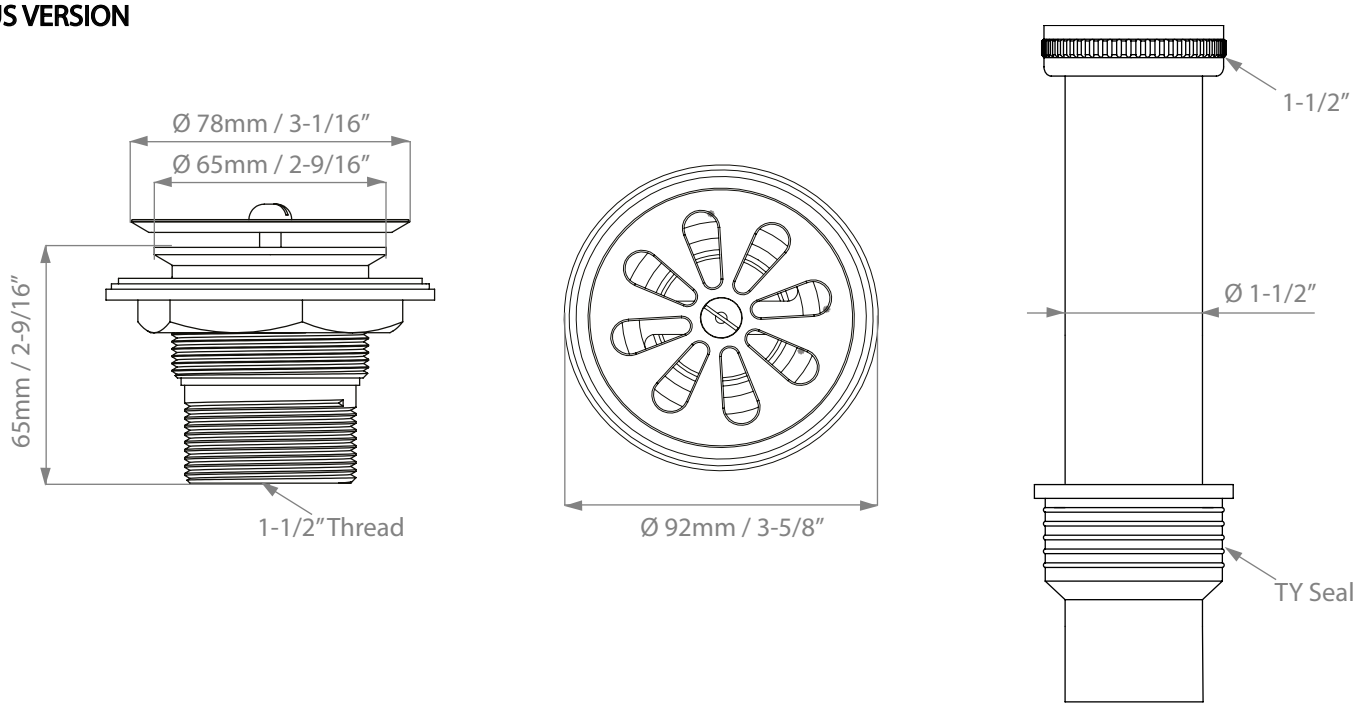

TAKING DELIVERY OF YOUR PRODUCTS

- Sign for delivery confirming the number of pallets/boxes received.
- Open boxes and crates checking that all components are included, in accordance with product drawing and delivery note.
- Check for any damage to the products that may have occurred during transportation.
- If there is any visible sign of damage to the crate/shipping packaging, please follow these steps:
  I. Sign for the goods as damaged
  II. Take pictures of the goods/damage whilst on the delivery vehicle and after unloading.
  III. Please keep all packaging intact as this may be required for part of the claims process.
- In accordance with our terms and conditions, report in writing, any damage, or missing products within 3 working days of delivery.

PROTECTING YOUR PRODUCTS ON SITE

- Upon delivery of your order, please ensure that all items are inspected, clean and dry at normal room temperature before returning to original packaging, until installation.
- For marble trays, remove from the wooden crate for inspection and then store in a clean environment on its long edge, ensuring that it is protected against any damage.
- Please follow the care instructions if you need to clean the products, being careful not to use any abrasive or chemical cleaners.

LIFTING AND MOVING

- Our Freestanding Showers weigh between 215 kg and 265 kg approx. once assembled.
- You will need to ensure that you have sufficient people on site to help move the Freestanding Shower components inside. we would recommend a minimum of 3 people to safely manoeuvre the shower tray.
- Please consider access to the property - any steps up to the front door, distance from the kerbside and any restrictive pathways or gates to the property.

PREPARING FOR INSTALLATION

- You will need to ensure that you have sufficient people on site to help with the careful lifting of the product.
- All water fittings should be installed by a qualified plumbing engineer and comply with the current water regulations. Products and connections should remain accessible for routine maintenance. We recommend that isolation and non-return valves are fitted in all installations where appropriate.
- Please read and follow the installation instructions carefully for each product and check that you have all of the components and tools required to carry out correct installation.
- Polished and plated surfaces are particularly prone to damage from dirty and incorrect tools; spanners should be suitably lined to prevent damage to plated surfaces.
- When using a sealant, only a suitable neutral curing sealant should be used.
- After installation, please ensure that the product is operating correctly and is clean (in accordance with the Care & Maintenance instructions below) and protected until completion of all works in the property.
- To avoid damage to internal mechanisms and cartridges, flush your existing hot and cold water systems to ensure there is no debris or dirt in existing pipework, prior to commencing installation.
- For optimal performance, copper pipework should be used for all supply pipes to Drummonds' showers. It may be possible for flexible connections to be used, however this can reduce the flow rate and overall performance. Please see our flow rate and troubleshooting guides for more information.
- A build-up of limescale is inevitable on all water fittings and, for hard water areas, we recommend the fitting of a suitable water treatment device.

YOUR CHOSEN FINISH

- A build-up of limescale is inevitable on all water fittings. For hard water areas, we recommend fitting a suitable water treatment device.
- Limescale build up can cause the enamel or marble to dull and feel rough. To prevent this, we strongly recommend rinsing and drying the shower tray after every use.
- Polished Exterior - The raw cast iron is hand polished to reveal the natural pitting on the exterior of the shower tray. This pitting (dark / black areas) is completely natural and will vary, making each shower tray unique.
- Raw Exterior - The exterior is left untouched following the casting process, leaving a naturally rough surface. The iron is then coated with a black, rust inhibiting finish.
- Primed & Painted Exterior - The exterior is smoothed down and a coat of primer applied, If you have chosen a painted shower tray, the final coat of your specified colour will be applied.

BLOW OUT DRAWING

DAD1039

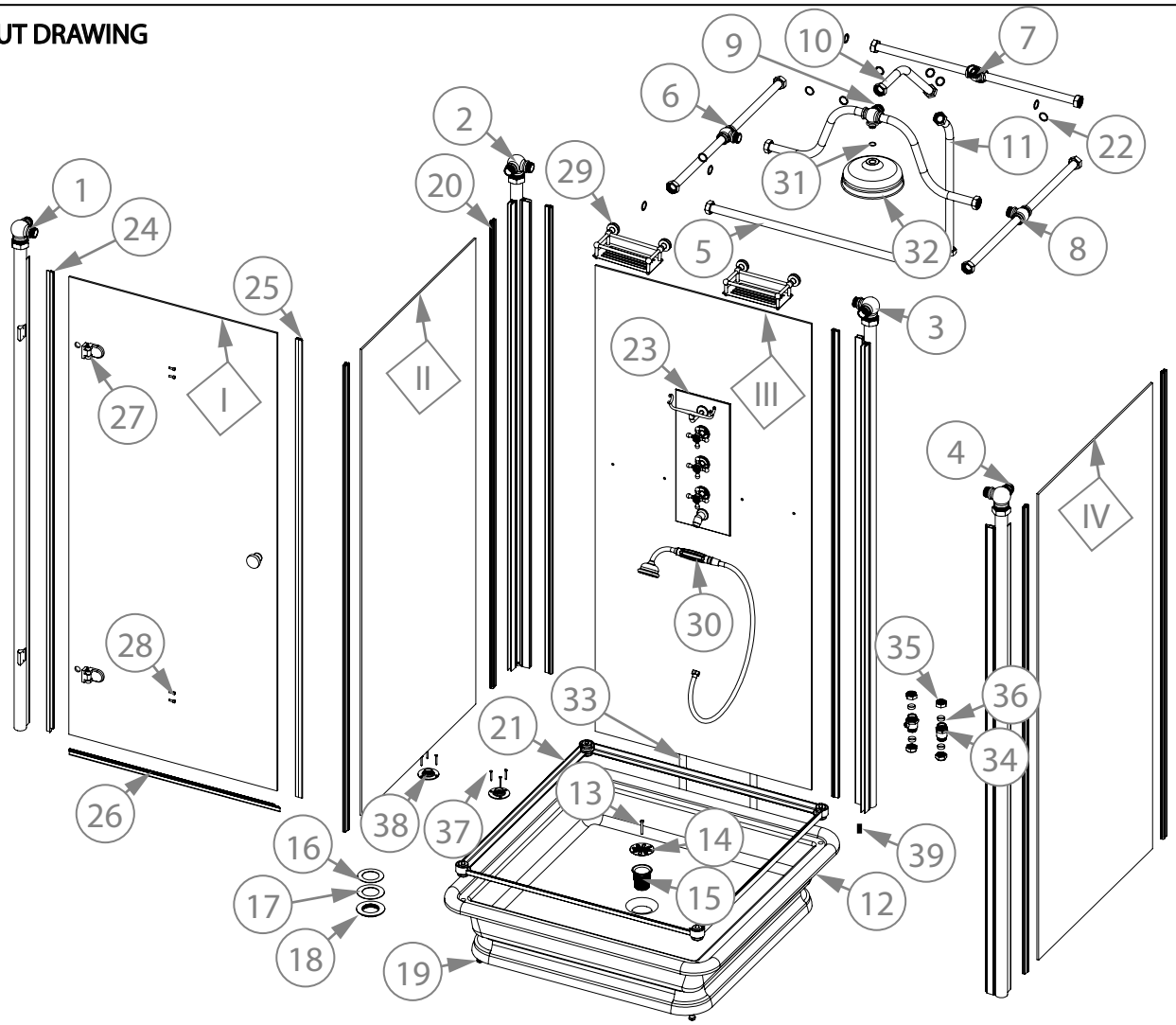

#	COMPONENT	QTY
I	Glass Door with Handle	1
II	Left Hand Glass	1
III	Back Glass with Control Block	1
IV	Right Hand Glass	1
1	Door Post with Hinges	1
2	Back Left Post	1
3	Back Right Post	1
4	Door Post	1
5	Front Pipe	1
6	Left Pipe	1
7	Back Pipe	1
8	Right Pipe	1
9	Curved Pipe	1
10	Pipe	1
11	Pipe	1
12	Tray with Skirt	1
13	Bolt	1
14	Waste Grill	1
15	Waste	1
16	Gasket	1

17	Poly Washer	1
18	Back Nut	1
19	Tray Adjustments	4
20	Seal	6
21	Frame	1
22	Washer	16
23	Control Block	1
24	Door Seal	1
25	Magnetic Door Seal	1
26	Door Seal	1
27	Hinges	2
28	Bolt	4
29	Bottle Rack	2
30	Handset	1
31	O Ring	1
32	Classic Rose	1
33	Supply	2
34	Olive	4
35	Nut	4
36	Isolation Valve	2
37	Screw	6

38	Escutcheon	2
39	Grub Screw	4

Assembled Weight
approx. 230 kg / 510 lbs

Shower Hose Length
1200 mm / 47-1/4"

INSTALLATION INSTRUCTIONS

DAD1039

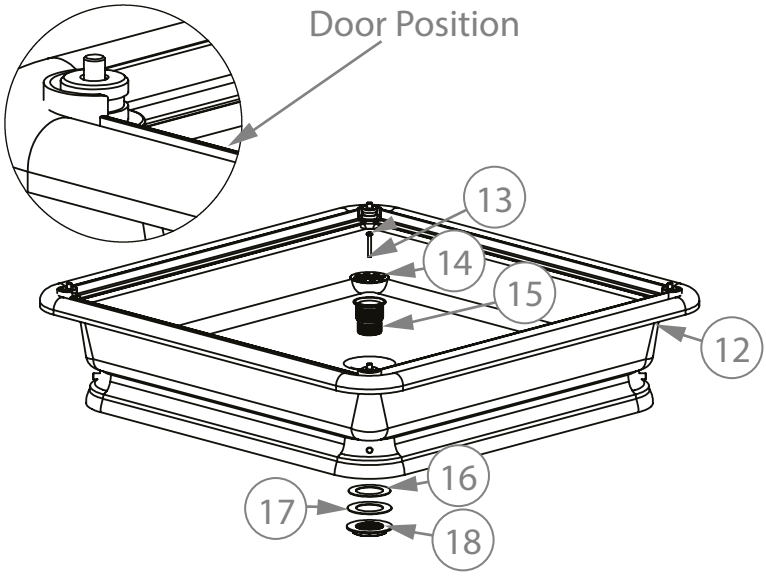

1. Insert waste (15) into the tray (12) using a suitable sealant. Insert rubber gasket (16) and poly washer (17) from the bottom for the tray (12) and tighten the back nut (18). Place waste grill (14) on the waste (15) from the top and tighten the bolt (13). Double check door position on the tray before placing in final position (see diagram).

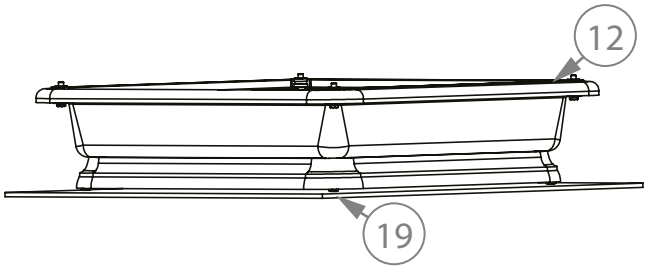

2. Place the shower tray (12) in its final position. Level the tray using the adjustments (19) located at the bottom of the skirt. NOTE: Do not silicone the tray skirting to the floor as this may cause damage to the shower tray exterior.

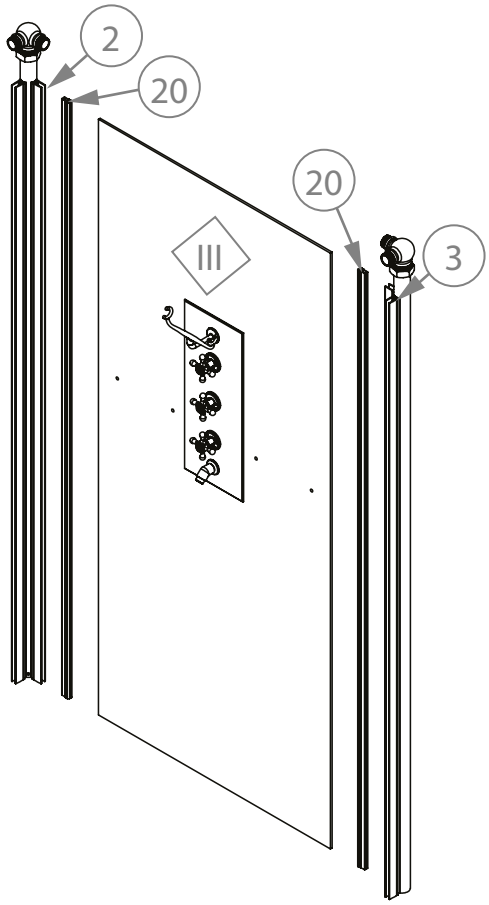

3. Place side seals (20) on both sides of the glass (III). Lubricate the seals with diluted washing-up liquid and push the glass (III) into pipes (2 and 3).

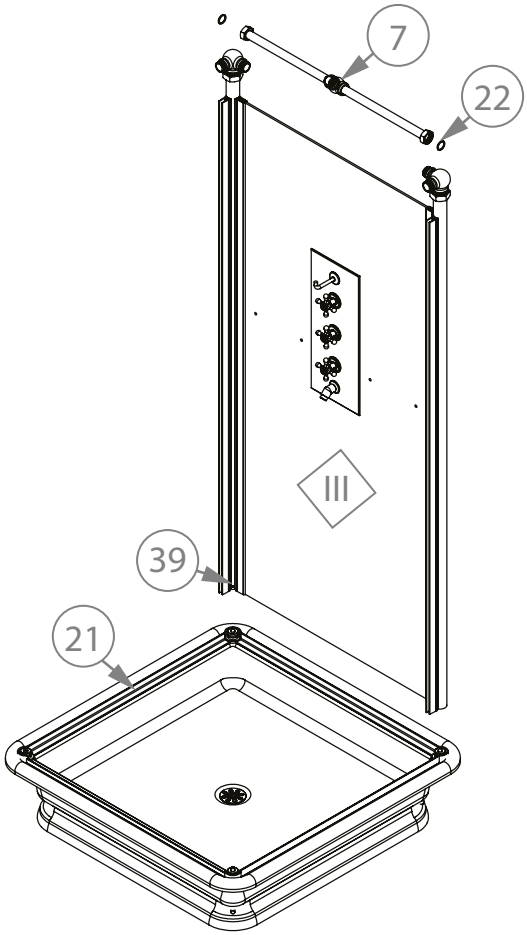

4. Slightly untighten the grub screw on each post (39) and place glass (III) with pipes on frame (21). Fix pipe (7) to the glass assembly (III) using nuts with washers (22). Do not tighten. NOTE: This assembly will need supporting while the parts for the next steps are prepared.

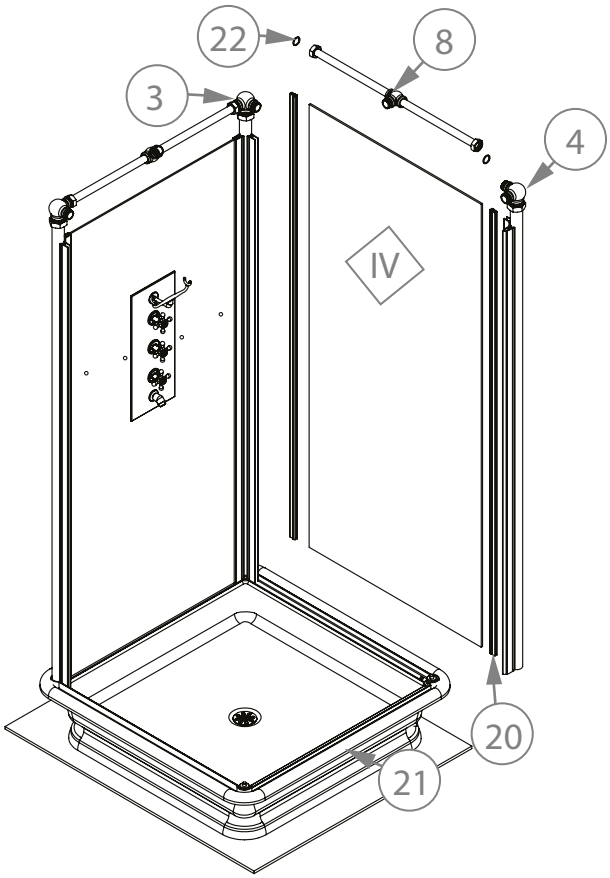

5. Place seals (20) on both sides of the glass (IV).
Lubricate the seals with washing-up liquid and push the glass (IV) into pipe (3). Push pipe (4) onto the glass (IV).
Fix pipe (8) to the glass assembly (IV) using nuts with washers (22). Do not tighten.

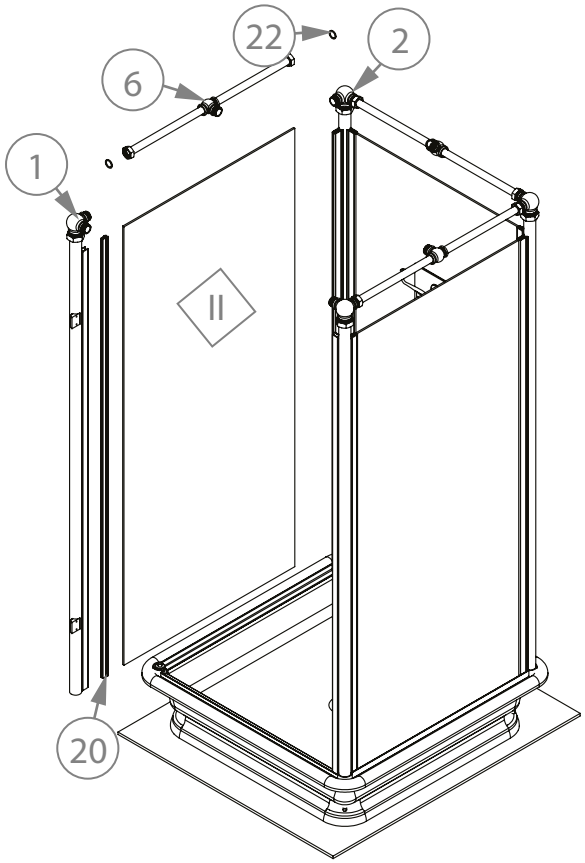

6. Place seals (20) on both sides of the glass (II).
Lubricate the seals with washing-up liquid and push the glass (II) into pipe (2). Push pipe (1) onto the glass (II).
Fix pipe (6) to the glass assembly (II) using nuts with washers (24). Do not tighten.

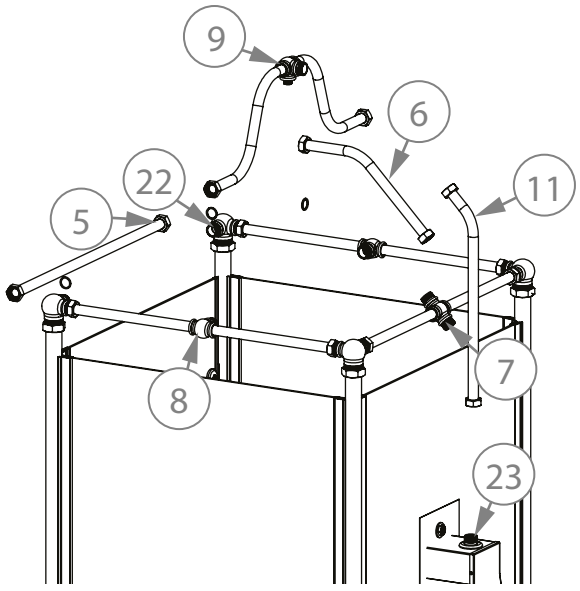

7. Screw curved pipe (9) including nuts and washers (22) into pipe (8) and pipe (6). Screw pipe (10) including nut and washers (22) into curved pipe (9) and to pipe (7). Screw pipe (11) including nuts and washers (22) into control block (23) and pipe (7). Do not tighten.

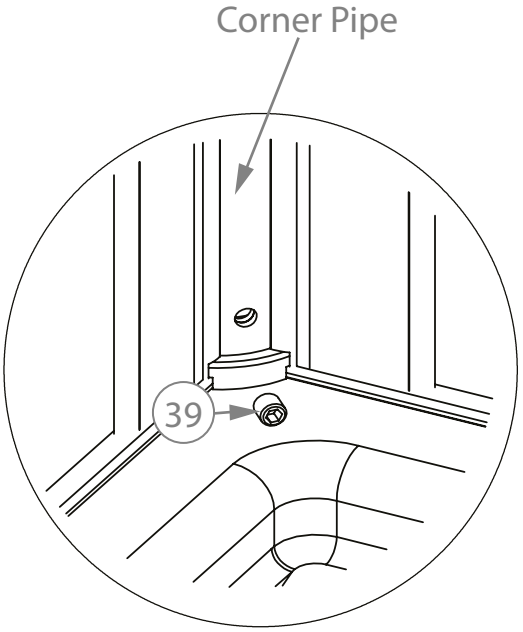

8. Secure the grub screw on all four posts (39).

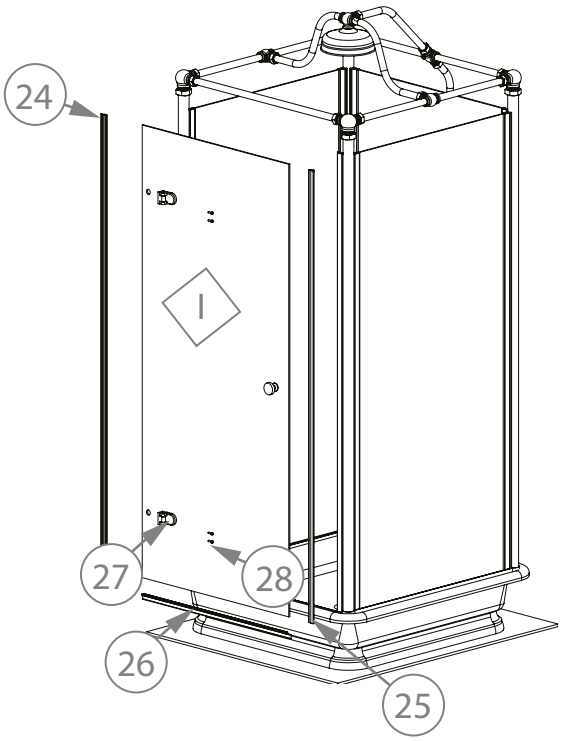

9. Place door seals (24, 25 and 26) on the glass (I). Screw glass (I) including hinges (27) onto pipe (1) using bolts (28). NOTE: Use a hex key - not supplied by Drummonds.

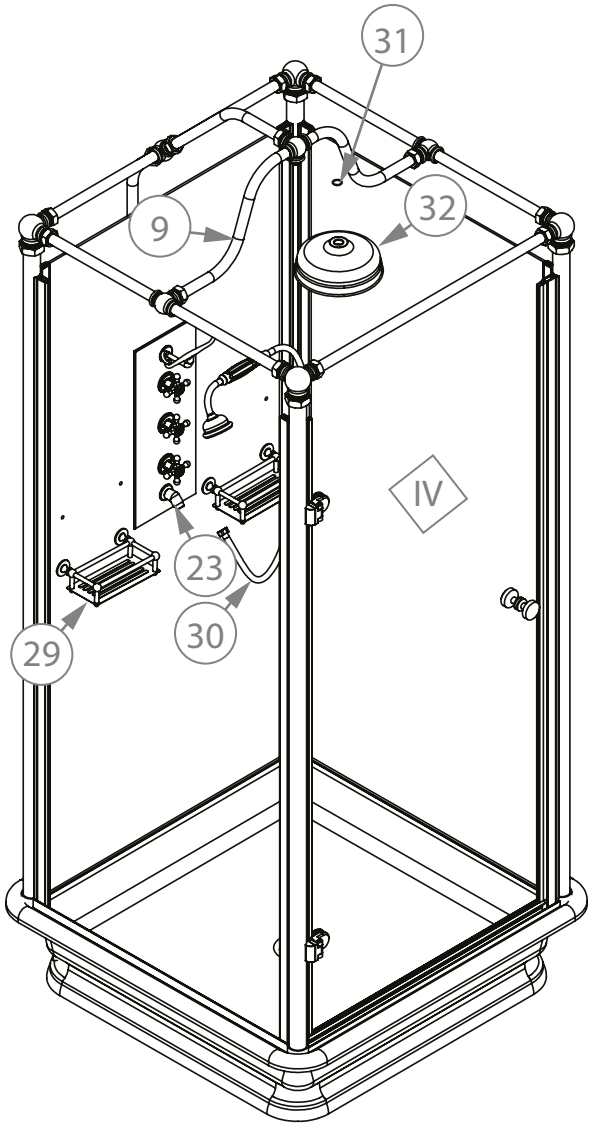

10. Screw handset (30) into control block (23). Fix bottle rack (29) to glass (IV). NOTE: Do not overtighten - it may result in cracking of the glass. Check if O Ring (31) is placed correctly. Fix classic rose (32) to curved pipe (9).

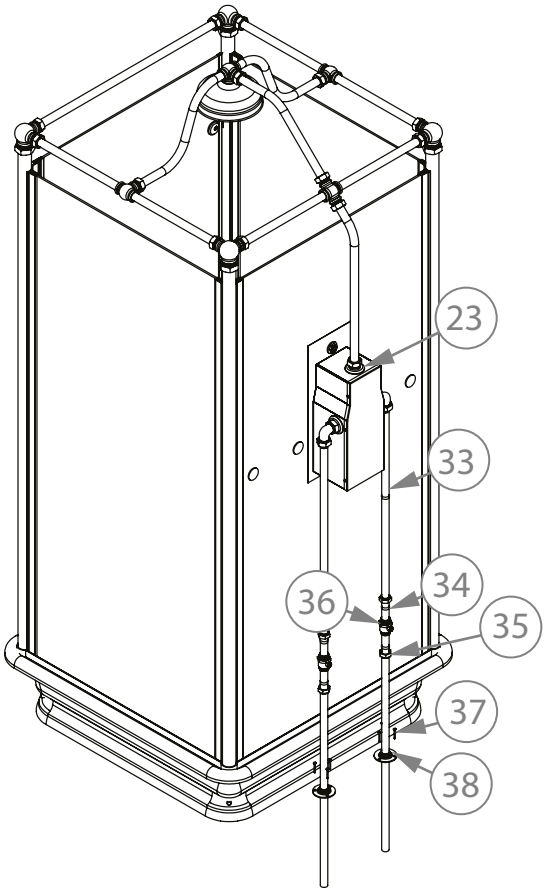

12. Measure the required length of pipes (33) to your water supply. Trim the pipes as required and fix them to the control block (23). Using escutcheons (38) mark screw holes on the floor. Remove escutcheons and drill the holes. Mount escutcheon (38) to the floor using screws (37). Connect isolation valves (36) to supply pipes (33) using olives (34) and nuts (35). Check shower enclosure is level and square, tighten all nuts.

Test the shower and check for leaks.

ADJUSTING THE SHOWER DOOR

#	COMPONENT	QTY
1	Post	1
2	Bolt M5x16	4
3	Hinges	2
4	Glass	1
5	Washer	2
6	Shield	2
7	Bolt M5x21	2

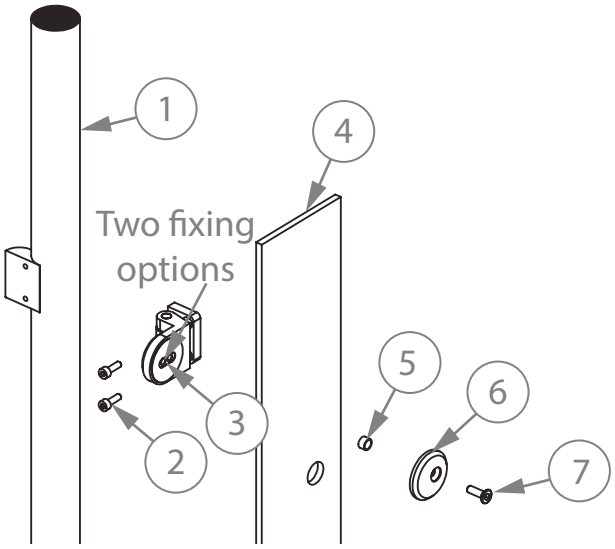

Adjusting the door will require 2 people. Loosen the bolt through the glass (7). Ensure the pads are not stuck to the glass, if they are, they should be peeled off and glued back onto the hinge so that they are held in position ready to clamp the glass. Move the glass as necessary to find the correct alignment. Tighten bolt (7) to clamp the glass.

NOTE:
There are 2 fixing points in the hinge for the bolt. These can be used to help align the glass to the post. You will need to make sure that the glass does not catch on the post when opened / closed.

THERMOSTATIC CARTRIDGE MAINTENANCE

DAD1039

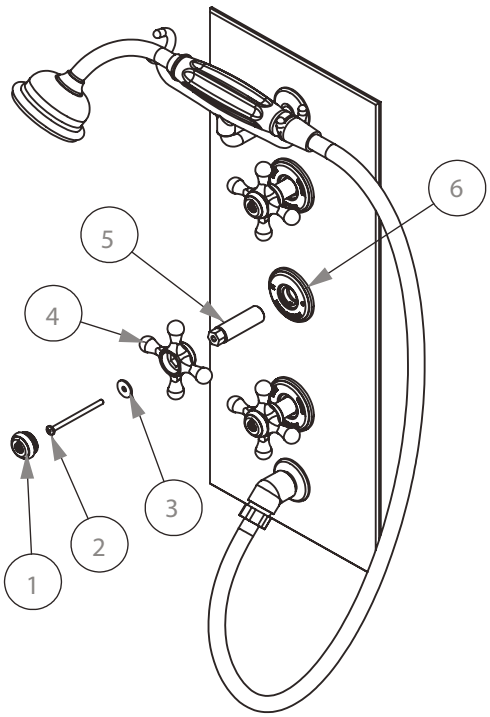

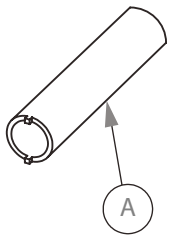

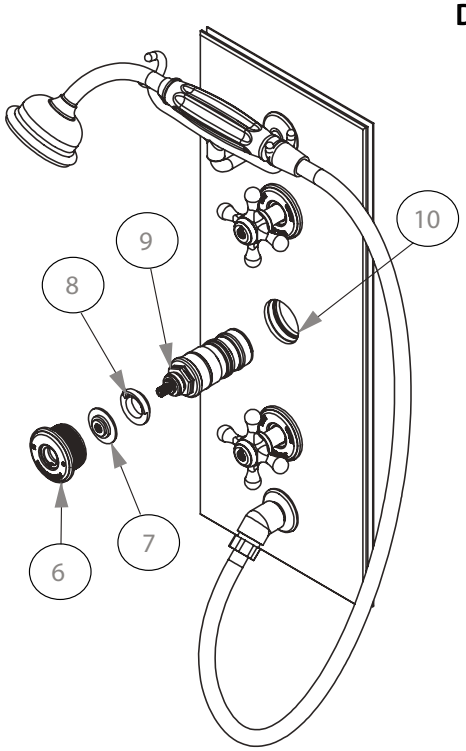

1. Isolate the water to the shower. Remove the ceramic indices (1) and unscrew bolt (2) with washer (3). Dismount tap handle (4) and tap shaft (5) from china disc with socket (6).

2. Use socket wrench (A) to unscrew china disc with socket (6). Remove brass plate (7) and plastic stop (8). Unscrew thermostatic cartridge (9) from thermostat body (10) using the socket wrench (A).

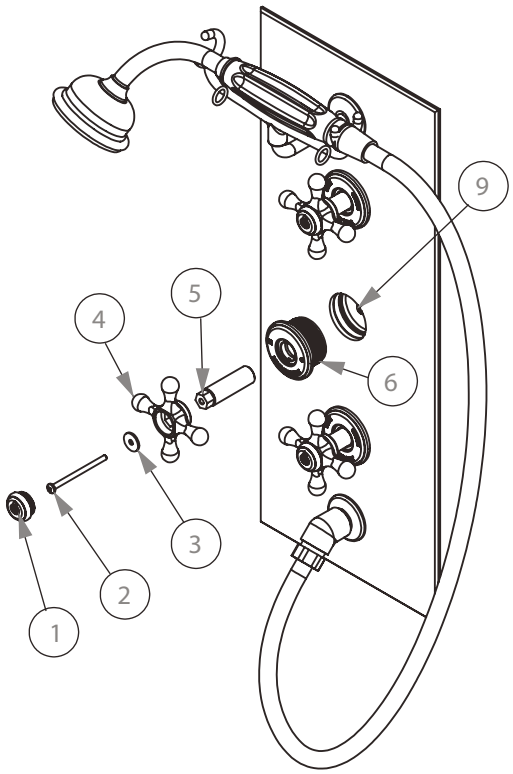

3. Clean cartridge as necessary and return the cartridge to the thermostatic valve and set temperature. Please refer to the Shower Maintenance document for further assistance.

4. Screw china disc with socket (6) to the thermostatic head (9) using socket wrench (A). Put tap shaft (5) into china socket (6). Put washer (3) inside tap handle (4) tighten bolt (2) and plug it with porcelain seat (1).

FLOW RATES

Drummonds thermostatic shower valves are rated to TMV2 standard and have been tested against BS EN 1287 and BS EN 1111. They are designed to operate within a dynamic pressure range of 1.0 and 5.0 bar. In general, the higher the water pressure, the greater the flow of water through the valve.

Recommended Set Up:
Hot water feed between 60°C - 65°C
Cold water feed between 10°C - 15°C

Freestanding Shower Product Code	Dynamic Pressure (Bar)	Mixed Flow Rate (L/M)
DAD1018	0.5	13.34
DAD1023	1.0	19.24
DAD1039	1.5	23.36
DAD1041	2.0	27.08
DAD1061	2.5	29.96
DAD1062	3.0	32.98
	3.5	35.19
	4.0	37.66
	4.5	39.99
	5.0	42.13

Flow rates have been measured in accordance with the recommended installation parameters, with a balanced dynamic pressure (bar) recorded at the shower valve inlet.

DYNAMIC V STATIC PRESSURE

Static pressure is the water pressure that exists at a fitting when no flow is taking place (tap is in closed position).

Dynamic pressure is measured with the valve open and the water flowing.
As a result the Dynamic pressure will be a lower figure than the static pressure.

Whilst a tap is in the closed position, the static pressure may be 3 bar, however once the tap is open the pressure may drop to 0.8 bar or less, as the supply pressure fluctuates.

Ref. www.bathroom-academy.co.uk

NOTES:
UK Handshowers are fitted with a 12 l/m flow restriction
US Handshowers are fitted with a 1.8 g/m flow restriction
US Shower Arms are fitted with a 2.0 g/m flow restriction

CARE AND MAINTENANCE

A Drummonds' Bathroom product is designed to give you years of faultless service and, if you follow the instructions below, will continue to look stunning for many years to come. All of Drummonds' Bathroom products are guaranteed for 1 year from the date of purchase against manufacturing defects. The guarantee does not cover faults caused by incorrect installation, neglect, misuse, wear & tear, inappropriate cleaning, or damage caused by the build-up of limescale. Please see Drummonds' T&Cs for further details of the product guarantee.

GENERAL USE

To help prevent limescale build up and water marks, all surfaces should be wiped dry after use. Only mild, nonabrasive cleaning products should be used followed by rinsing and drying with a soft cloth.

POLISHED BRASS PRODUCTS

All of Drummonds taps and fittings are made from 100% brass, which can be supplied in a polished finish that is not lacquered. Polished brass will tarnish very quickly, especially in the bathroom where it is exposed to moisture. If you wish to maintain a shiny brass finish, regular polishing with an appropriate metal polish such as Brasso will be required.

POLISHED CHROME AND NICKEL PRODUCTS

Wipe off any water marks after use with a soft cloth or towel. Clean on a regular basis with a mild non-abrasive bathroom cleaner, again taking care to dry the product with a soft cloth or towel. For stubborn stains, particularly in hard water areas, remove with Brasso. Nickel products will require periodic polishing with Brasso, otherwise they will develop an aged patina like silverware.

SHOWER HEADS AND ROSES

Clean and descale on a regular basis, paying particular attention to the holes in the shower head to ensure that they do not become blocked. Remove and clean the thermostatic cartridge on a periodic basis to prevent permanent damage from limescale.

CAST IRON BATHS AND SHOWER TRAYS

The interior of a Drummonds bath or shower tray is enamelled with dry frit vitreous enamel which is very hard wearing and durable. To maintain the soft shine on the surface of the enamel rinse the bath out after each use, making sure that you get rid of any gritty deposits. and then dry it with a soft cloth or towel. To remove marks or dirt use a non-abrasive bathroom cleaner which is safe for use on enamelled surfaces (please see the Vitreous Enamel Association website for guidance on suitable cleaners www.vea.org.uk). It is very important to ensure that a dripping, or leaking, tap is repaired immediately to prevent the enamel being permanently damaged.

BATH EXTERIOR

Caring for the exterior of your bath or shower tray is dependent on the finish of your bath:

- A raw, primed, or painted exterior does not require any maintenance, other than occasional cleaning to maintain the appearance. If the exterior becomes scratched, exposing the cast iron below, it must be treated immediately with a suitable rust inhibitor, followed by a metal primer and paint finish to seal the exterior.
- A polished or lacquered exterior is a beautiful finish, but it must be treated very carefully to avoid scratching especially when moving the bath into position. If the exterior does become scratched, please call Drummonds immediately so that we can advise on the best course of action, In general use, the polished exterior should simply be wiped down with a soft clean cloth. Never use any kind of bathroom cleaner on the exterior of your bath. Care should also be taken when cleaning the floor around the bath, particularly with a skirted bath, not to allow floor cleaner to splash or rub on the bath, as it may damage the lacquer which protects the bath from rusting.

CHINA SANITARYWARE

Clean on a regular basis with a mild, non-abrasive bathroom cleaner to prevent the buildup of dirt and limescale. Ensure that dripping taps are repaired quickly to avoid the surface of the China becoming stained.

MARBLE VANITY BASINS

A Drummonds' marble vanity basin is a natural product which is hand polished and sealed in the factory. Clean the surface of the marble after use with a soft cloth, making sure that you dry the surface to prevent watermarks from developing on the marble. We would recommend Lithofin Easy Care which is a daily cleaner/conditioner designed for natural stones. under no circumstances use any kind of bathroom cleaner or limescale remover on the surface of the marble. To prevent staining, it is important to ensure that any cosmetics, including shampoo, are wiped off the surface immediately.

WOODEN LOO SEATS

Clean after use with a damp soft (non-abrasive) cloth and dry immediately. Never use a bathroom cleaner on your loo seat as this is likely to strip off the varnish invalidating the guarantee. Use a high-quality furniture wax polish occasionally such as Mylands Wax - Natural and apply in accordance with the manufacturers' instructions. Under no circumstance stand on your loo seat. Replace bumpers when perished as these can mark and stain the toilet seat.