TECHNICAL DRAWING

DAD1810DF

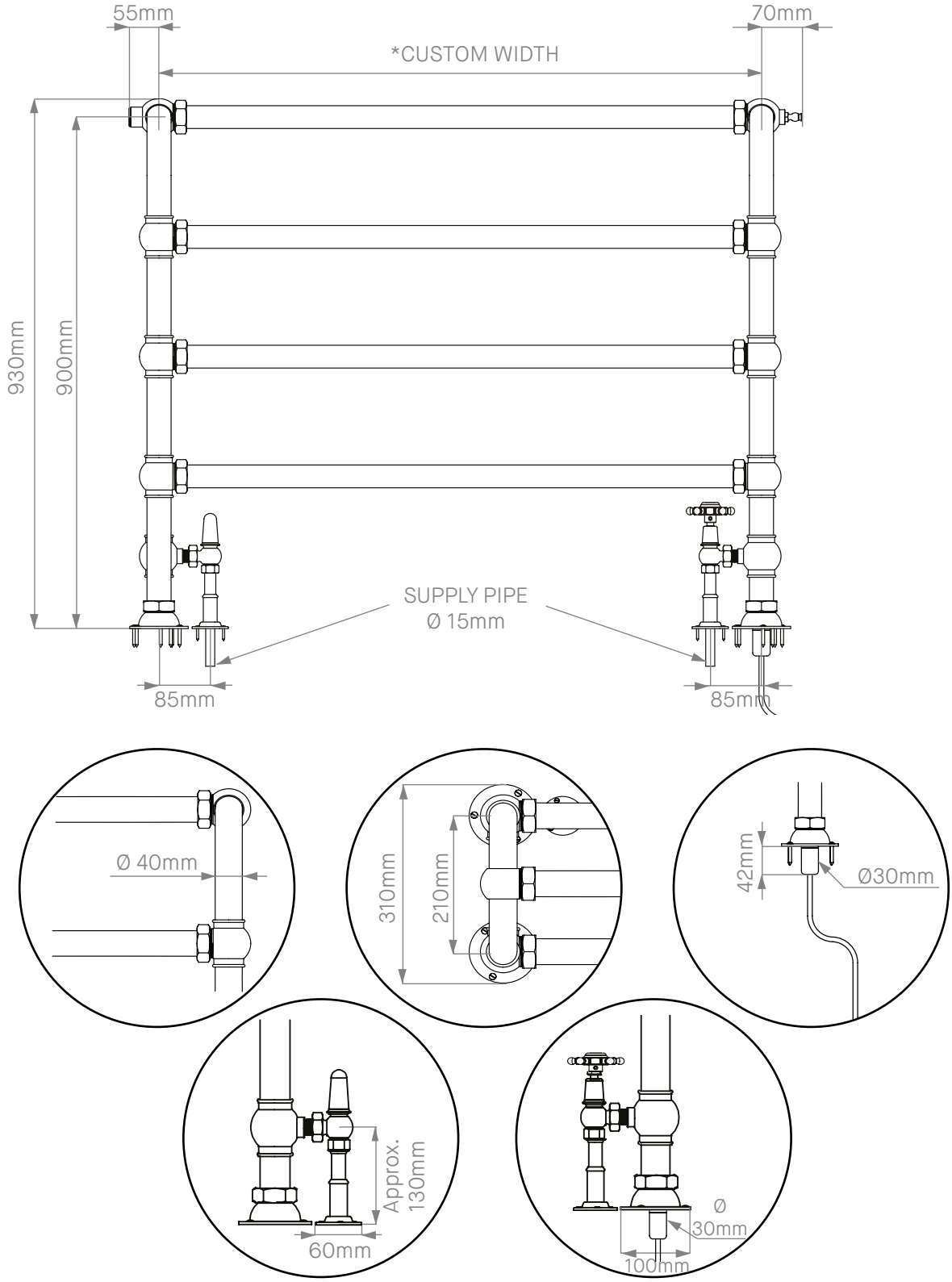

* For the custom width dimensions, please refer to your completed customisation form.

IMPORTANT

- Please remove towel rails from their wooden crate prior to storage.
- Storage must be in a clean, dry environment at normal room temperature.
- Remove dust, dirt or moisture build up during the storage period to avoid tarnishing.
- Radiator valves sold separatley - Please remove towel rails from their wooden crate prior to storage.
- Radiator valves sold separatley.

Heating Element Supplied (IP55)

UK: 230V approx. 1000mm

TAKING DELIVERY OF YOUR PRODUCTS

- Sign for delivery confirming the number of pallets/boxes received.
- Open boxes and crates checking that all components are included, in accordance with product drawing and delivery note.
- Check for any damage to the products that may have occurred during transportation. If there is any visible sign of damage to the crate/shipping packaging, please follow these steps:
  - I. Sign for the goods as damaged
  - II. Take pictures of the goods/damage whilst on the delivery vehicle and after unloading.
  - III. Please keep all packaging intact as this may be required for part of the claims process.

- In accordance with our terms and conditions, report in writing, any damage, or missing products within 3 working days of delivery.

PREPARING FOR INSTALLATION

- All water fittings should be installed by a qualified plumbing engineer and comply with the current water regulations. Products and connections should remain accessible for routine maintenance. We recommend that isolation and non-return valves are fitted in all installations where appropriate.
- Please read and follow the installation instructions carefully for each product and check that you have all the components and tools required to carry out correct installation.
- Take all necessary precautions to ensure that all parts are properly protected during and after installation.
- Polished and plated surfaces are particularly prone to damage from dirty and incorrect tools; spanners should be suitably lined to prevent damage to plated surfaces.
- After installation, please ensure that the product is operating correctly and is clean (in accordance with the Care & Maintenance instructions) and protected until completion of all works in the property.

TECHNICAL INFORMATION

- Drummonds Towel Rails have been tested to European Standards EN-442-1 making them suitable for standard central heating systems.
- We do not recommend connecting towel rails to the hot water system.
- Switches and temperature controls are not supplied by Drummonds, please discuss your requirements with your electrician.
- Surface temperature of the towel rail will depend on the temperature of your water supply.
- The heating element will produce a varying surface temperature which depends on the size if the towel rail. Maximum termperature range is 55-62°C. Heating elements supplied are IP55 and have approx, 1000mm / 39-3/8” cable.
- We would recommend using the electric element during summer months and central heating during winter.
- To convert from central heating to electric, please follow the next steps:

  NOTE: Please ensure that the towel rail is full before using the heating element.
  - I. Turn off the main inlet valve to isolate the towel rail (leave the return valve open)
  - II. Slightly loosen the bleed valve to release any pressure build up
  - III. Once isolated, safely turn on heating element using the thermostat and switch (not supplied by Drummonds).
  - IV. To convert back to central heating, turn off the heating element
  - V. Open the main inlet valve
  - VI. Bleed the towel rail.

TECHNICAL DETAILS

DAD1810DF

Number of Bars	Product Code	Height (a) mm	Example Custom Width (b) mm	Depth (c) mm	BTU/hr
7	DAD1810DF	900	550	210	1170
7		900	1000	210	1651

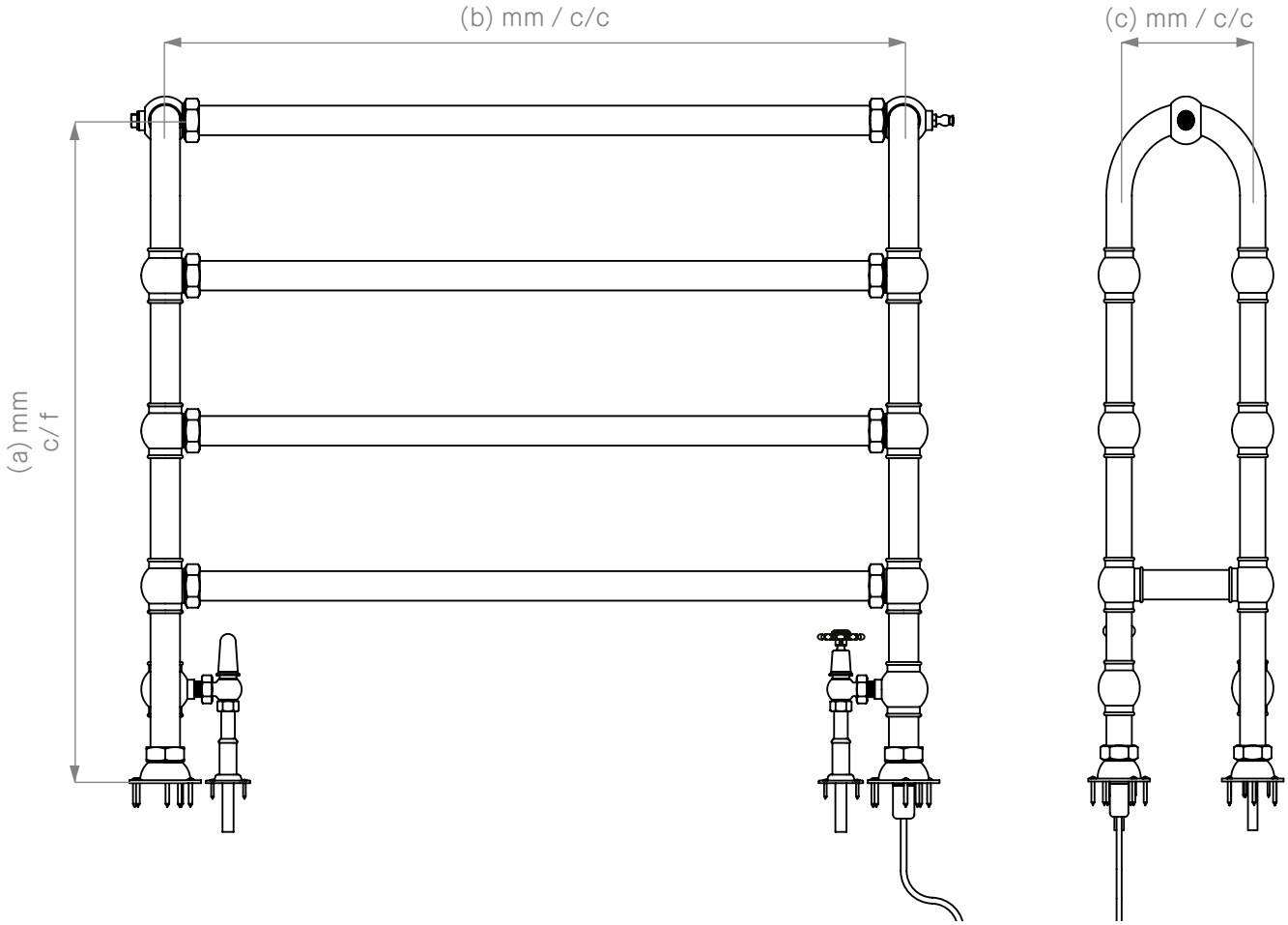

SAFETY GUIDANCE NOTES

- This product must be installed by a qualified professional, in accordance with the relevant standards and regulations applicable in your country.
- This product is not intended for use by young children or infirm persons without appropriate supervision.
- DO NOT use the towel rail to hang articles that have been cleaned with dry cleaning fluids.
- DO NOT hang items on the towel rail that have been in contract with oil or petroleum based products.
- DO NOT immerse the towel in any liquid.
- Ensure that installation is carried out strictly in accordance with these instructions.

BLOW OUT DRAWING

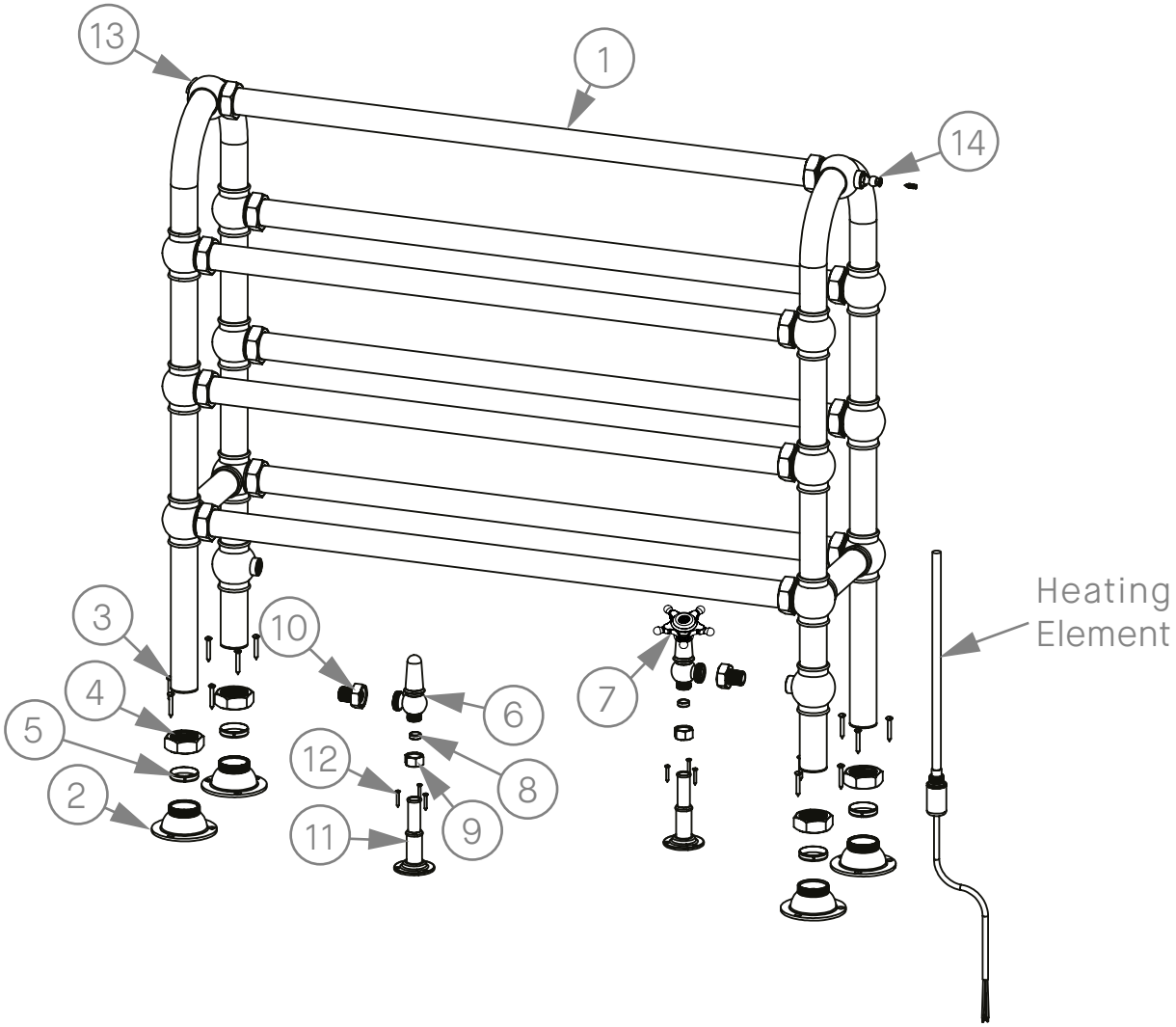

#	COMPONENT	QTY
1	Towel Rail	1
2	Escutcheon	4
3	Screw 10 x 1-1/2” (DAF111)	12
4	Olive	4
5	Nut	4
6 & 7 8 9 10	Radiator Valves Olive Nut Tail DAD1757) SOLD SEPARATELY	2 2 2 2
11 12	Extendable Escutcheon Screw 6x 1” (DAD3070)	2 6
13	3 Bar Pressure Release Valve	1
14	Bleed Valve	1

INSTALLATION INSTRUCTIONS

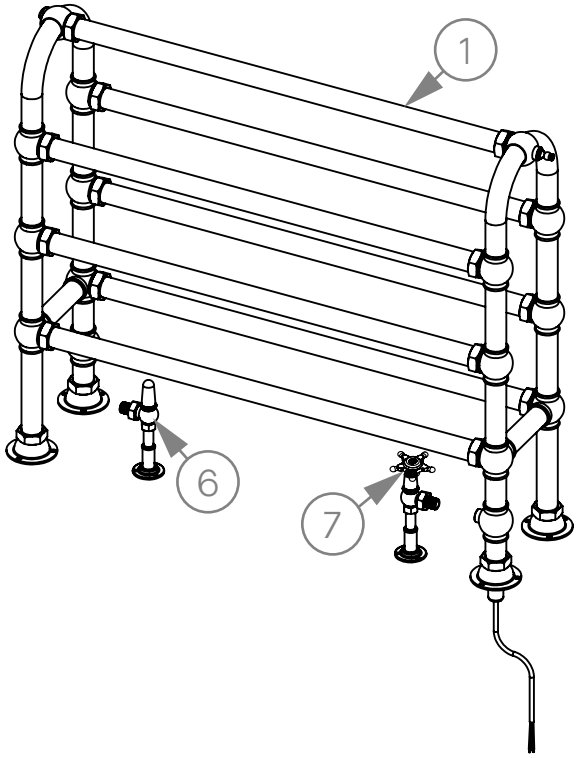

1. Carefully unpack the towel rail (1). Be careful not to damage the polished surfaces. Determine the elevation and wall where the towel rail is to be installed. Fix valves (6 & 7) to the towel rail (1). Do not tighten nuts at this stage.

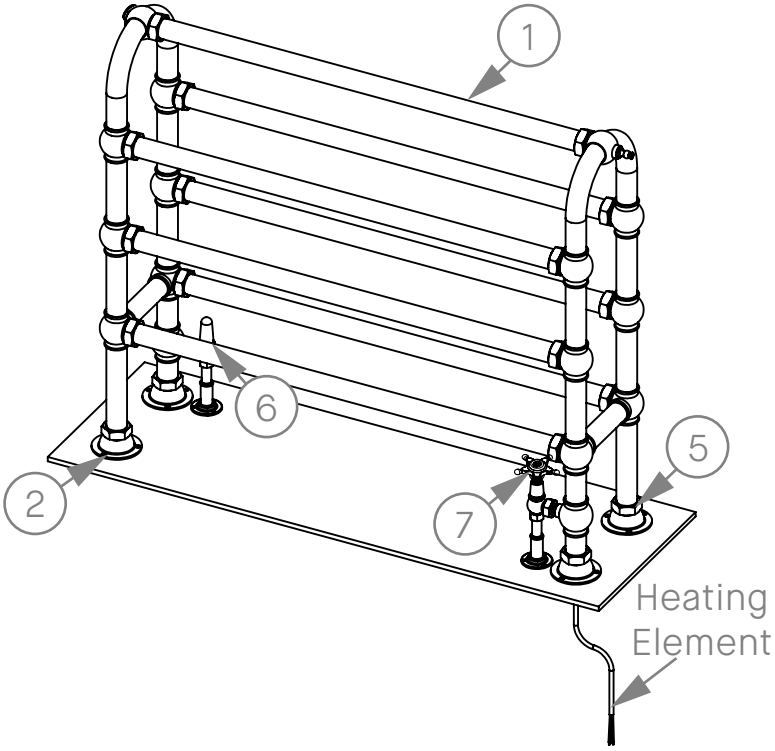

2. To level the towel rail (1) loosen nuts (5), align and retighten nuts. Mark drilling points on the floor for towel rail (1) and valves (6 & 7). Do not drill through the escutcheon (2). Remove valves (6 & 7). Drill holes and reposition towel rail (1). Connect heating element to the power supply.

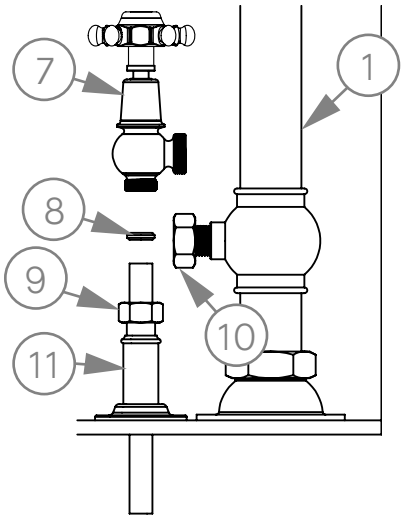

3. Mount the extendable escutcheons (11) on the supply pipe. Unscrew nut (9) and olive (8) from valve (6) and place them on the supply pipe. Place valve (6) onto the supply pipe and tighten the olive (8) and nut (9) to the valve. Tighten the valve (6) using a suitable sealant to the towel rail (1) using tail (10). Repeat this sequence for valve (7).

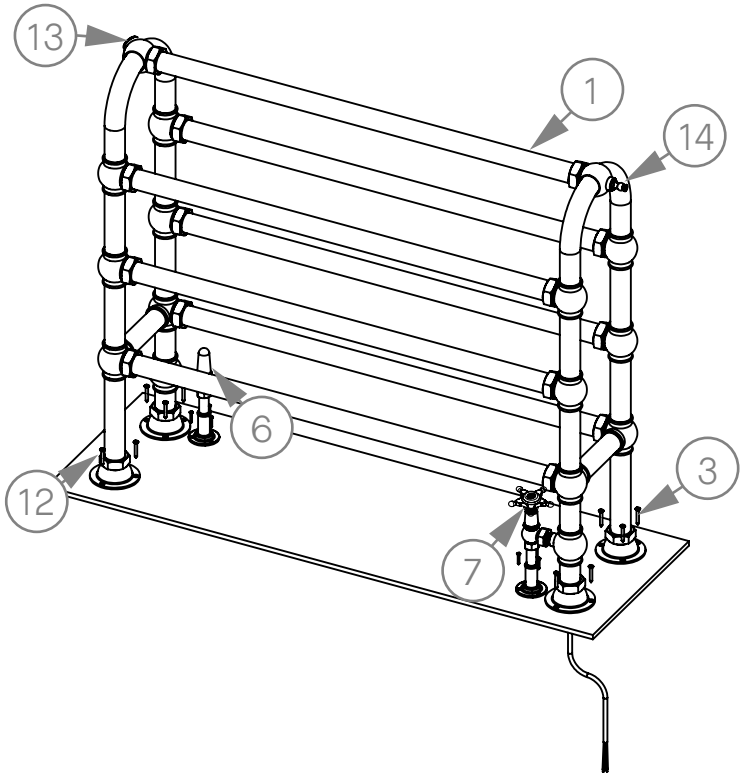

4. Fix towel rail (1) and valves (6 & 7) to the floor using screws (3 & 12). Fill the towel rail (1) with water using the bleed valve (14). Test and check for leaks.

CARE AND MAINTENANCE

A Drummonds' Bathroom product is designed to give you years of faultless service and, if you follow the instructions below, will continue to look stunning for many years to come. All of Drummonds' Bathroom products are guaranteed for 1 year from the date of purchase against manufacturing defects. The guarantee does not cover faults caused by incorrect installation, neglect, misuse, wear & tear, inappropriate cleaning, or damage caused by the build-up of limescale. Please see Drummonds' T&Cs for further details of the product guarantee.

GENERAL USE

To help prevent limescale build up and water marks, all surfaces should be wiped dry after use. Only mild, nonabrasive cleaning products should be used followed by rinsing and drying with a soft cloth.

POLISHED BRASS PRODUCTS

All of Drummonds taps and fittings are made from 100% brass, which can be supplied in a polished finish that is not lacquered. Polished brass will tarnish very quickly, especially in the bathroom where it is exposed to moisture. If you wish to maintain a shiny brass finish, regular polishing with an appropriate metal polish such as Brasso will be required.

POLISHED CHROME AND NICKEL PRODUCTS

Wipe off any water marks after use with a soft cloth or towel. Clean on a regular basis with a mild non-abrasive bathroom cleaner, again taking care to dry the product with a soft cloth or towel. For stubborn stains, particularly in hard water areas, remove with Brasso. Nickel products will require periodic polishing with Brasso, otherwise they will develop an aged patina like silverware.

SHOWER HEADS AND ROSES

Clean and descale on a regular basis, paying particular attention to the holes in the shower head to ensure that they do not become blocked. Remove and clean the thermostatic cartridge on a periodic basis to prevent permanent damage from limescale.

CAST IRON BATHS AND SHOWER TRAYS

The interior of a Drummonds bath or shower tray is enamelled with dry frit vitreous enamel which is very hard wearing and durable. To maintain the soft shine on the surface of the enamel rinse the bath out after each use, making sure that you get rid of any gritty deposits. and then dry it with a soft cloth or towel. To remove marks or dirt use a non-abrasive bathroom cleaner which is safe for use on enamelled surfaces (please see the Vitreous Enamel Association website for guidance on suitable cleaners www.vea.org.uk). It is very important to ensure that a dripping, or leaking, tap is repaired immediately to prevent the enamel being permanently damaged.

BATH EXTERIOR

Caring for the exterior of your bath or shower tray is dependent on the finish of your bath:

- A raw, primed, or painted exterior does not require any maintenance, other than occasional cleaning to maintain the appearance. If the exterior becomes scratched, exposing the cast iron below, it must be treated immediately with a suitable rust inhibitor, followed by a metal primer and paint finish to seal the exterior.
- A polished or lacquered exterior is a beautiful finish, but it must be treated very carefully to avoid scratching especially when moving the bath into position. If the exterior does become scratched, please call Drummonds immediately so that we can advise on the best course of action, In general use, the polished exterior should simply be wiped down with a soft clean cloth. Never use any kind of bathroom cleaner on the exterior of your bath. Care should also be taken when cleaning the floor around the bath, particularly with a skirted bath, not to allow floor cleaner to splash or rub on the bath, as it may damage the lacquer which protects the bath from rusting.

CHINA SANITARYWARE

Clean on a regular basis with a mild, non-abrasive bathroom cleaner to prevent the buildup of dirt and limescale. Ensure that dripping taps are repaired quickly to avoid the surface of the China becoming stained.

MARBLE VANITY BASINS

A Drummonds' marble vanity basin is a natural product which is hand polished and sealed in the factory. Clean the surface of the marble after use with a soft cloth, making sure that you dry the surface to prevent watermarks from developing on the marble. We would recommend Lithofin Easy Care which is a daily cleaner/conditioner designed for natural stones. under no circumstances use any kind of bathroom cleaner or limescale remover on the surface of the marble. To prevent staining, it is important to ensure that any cosmetics, including shampoo, are wiped off the surface immediately.

WOODEN LOO SEATS

Clean after use with a damp soft (non-abrasive) cloth and dry immediately. Never use a bathroom cleaner on your loo seat as this is likely to strip off the varnish invalidating the guarantee. Use a high-quality furniture wax polish occasionally such as Mylands Wax - Natural and apply in accordance with the manufacturers' instructions. Under no circumstance stand on your loo seat. Replace bumpers when perished as these can mark and stain the toilet seat.