TECHNICAL DRAWING

DAD3052, DAD3053

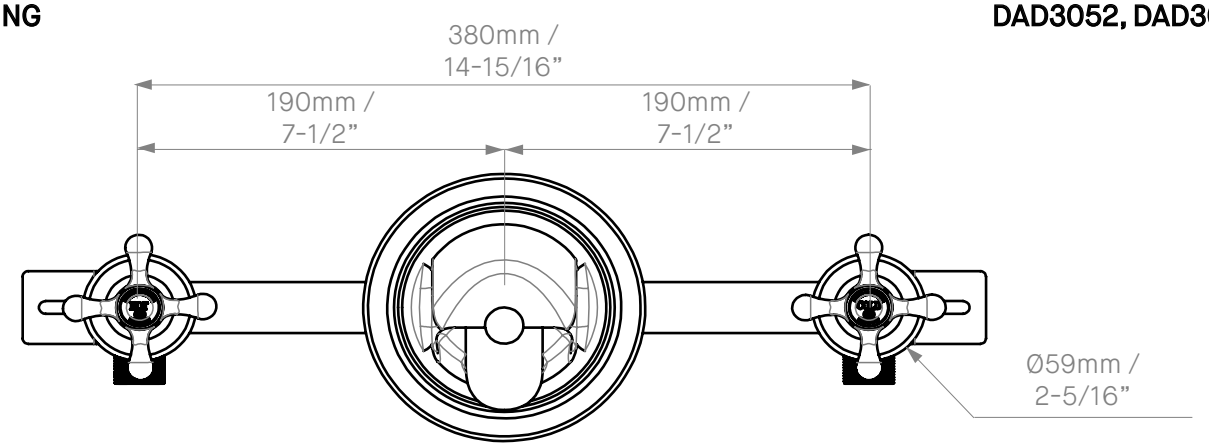

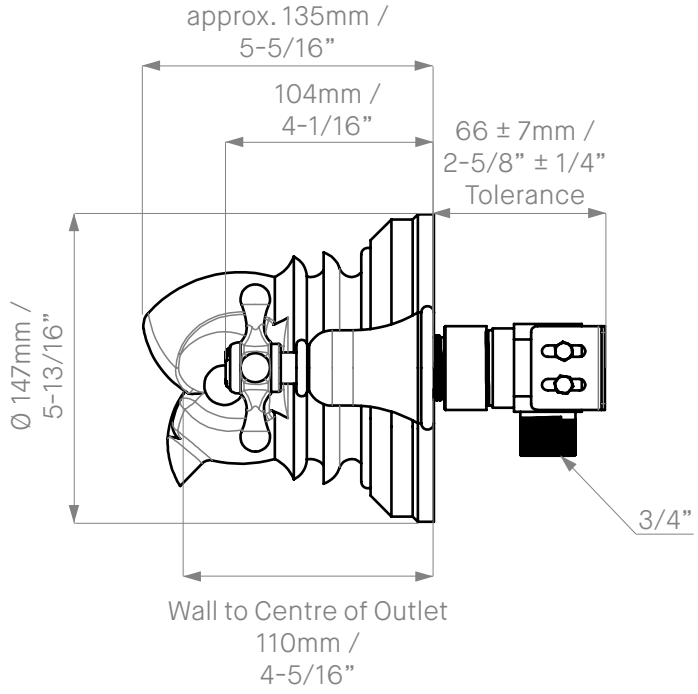

HANDLE OPTIONS

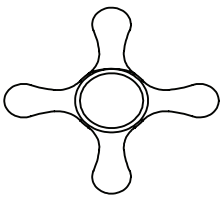

DAD3052 - Mull Head

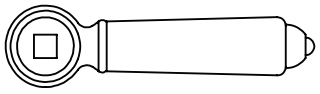

DAD3053 - Coll Lever

TAKING DELIVERY OF YOUR PRODUCTS

- Sign for delivery confirming the number of pallets/boxes received.
- Open boxes and crates checking that all components are included, in accordance with product drawing and delivery note.
- Check for any damage to the products that may have occurred during transportation.
- If there is any visible sign of damage to the crate/shipping packaging, please follow these steps:
  I. Sign for the goods as damaged
  II. Take pictures of the goods/damage whilst on the delivery vehicle and after unloading.
  III. Please keep all packaging intact as this may be required for part of the claims process.
- In accordance with our terms and conditions, report in writing, any damage, or missing products within 3 working days of delivery.

PROTECTING YOUR PRODUCTS ON SITE

- Upon delivery of your order, please ensure that all items are inspected, clean and dry at normal room temperature before returning to original packaging, until installation.
- Please follow the care instructions if you need to clean the products, being careful not to use any abrasive or chemical cleaners.

PREPARING FOR INSTALLATION

- All water fittings should be installed by a qualified plumbing engineer and comply with the current water regulations. Products and connections should remain accessible for routine maintenance. We recommend that isolation and non-return valves are fitted in all installations where appropriate.
- Please read and follow the installation instructions carefully for each product and check that you have all of the components and tools required to carry out correct installation.
- Polished and plated surfaces are particularly prone to damage from dirty and incorrect tools; spanners should be suitably lined to prevent damage to plated surfaces.
- When using a sealant, only a suitable neutral curing sealant should be used.
- After installation, please ensure that the product is operating correctly and is clean (in accordance with the Care & Maintenance instructions below) and protected until completion of all works in the property.
- To avoid damage to internal mechanisms and cartridges, flush your existing hot and cold water systems to ensure there is no debris or dirt in existing pipework, prior to commencing installation.
- For optimal performance, copper pipework should be used for all supply pipes to Drummonds' showers. It may be possible for flexible connections to be used, however this can reduce the flow rate and overall performance. Please see our flow rate and troubleshooting guides for more information.
- A build-up of limescale is inevitable on all water fittings and, for hard water areas, we recommend the fitting of a suitable water treatment device.

YOUR CHOSEN FINISH

- Finished in one of brassware finishes. We do not lacquer our brassware. allowing the live surface to age and wear naturally in the traditional way. The speed of change will be dependent on the environment (heat and moisture). Please see the 'Bespoke Special Finish' section on our website for more information.

BLOW OUT DRAWING

DAD3052, DAD3053

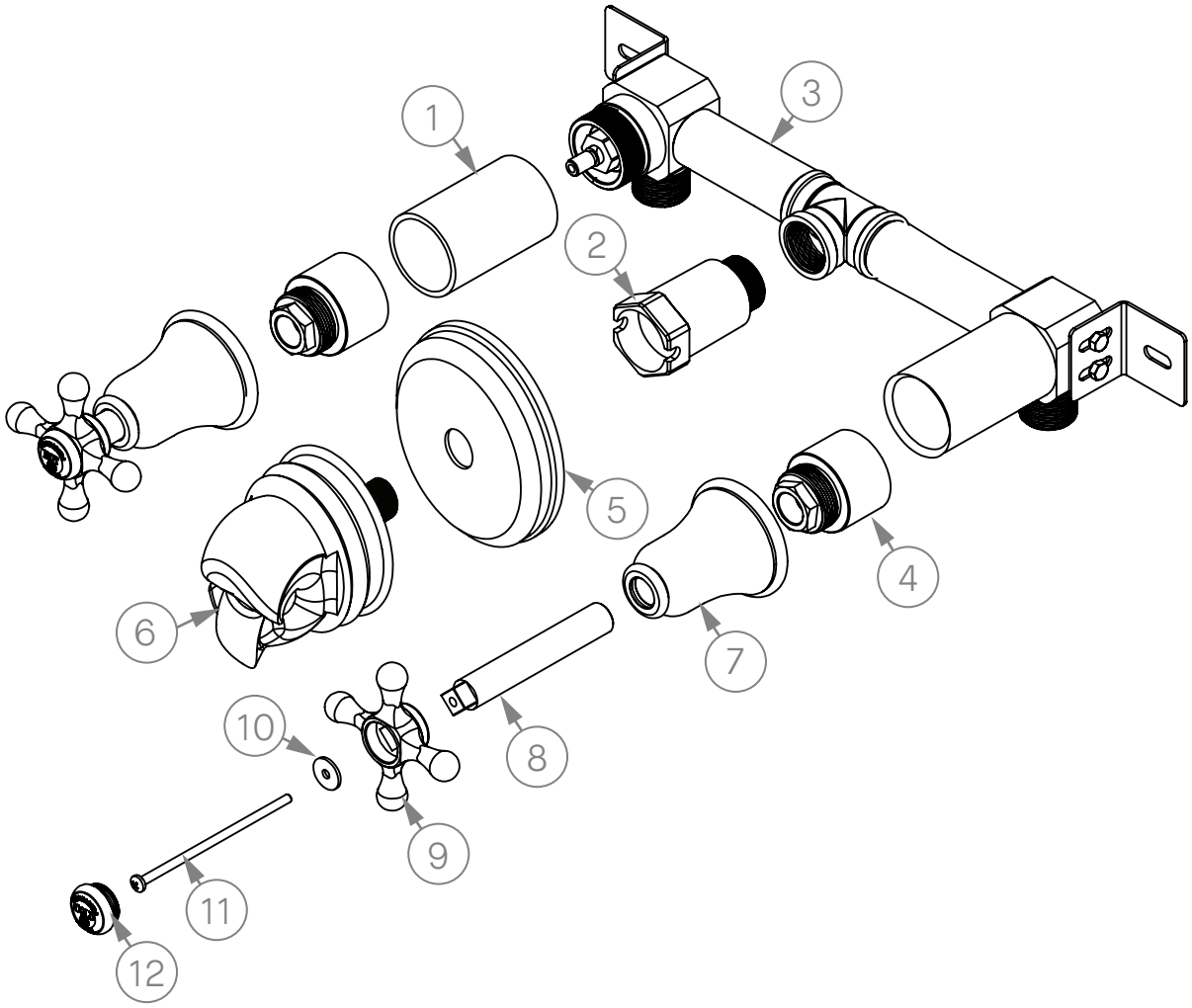

#	ROUGH IN COMPONENTS	QTY
1	Plastic Cover Ø 42mm	2
2	Spout Plastic Cover Ø 35mm	1
3	Body	1

#	COMPONENTS	QTY
4	Cartridge Cover	2
5	Shield	1
6	Lions Head	1
7	Tap Shield	2
8	Tap Spindle	2
9	Classic Handle	2
10	Washer	2
11	Bolt M4x95	2
12	Ceramic Indices Hot/Cold	2

INSTALLATION INSTRUCTIONS

DAD3052, DAD3053

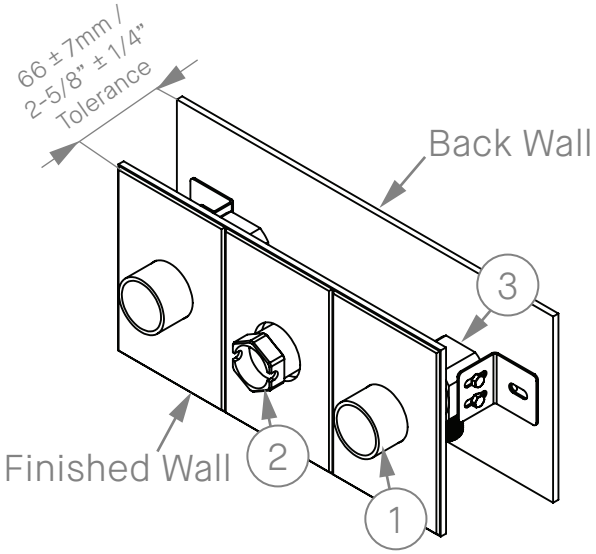

1. Attach the plastic covers (1 and 2) to body (3). Offer up body (3) to the back wall and ensure that the finished wall, including tiling is within tolerance. Plumb in the rough in, test and check for leaks.

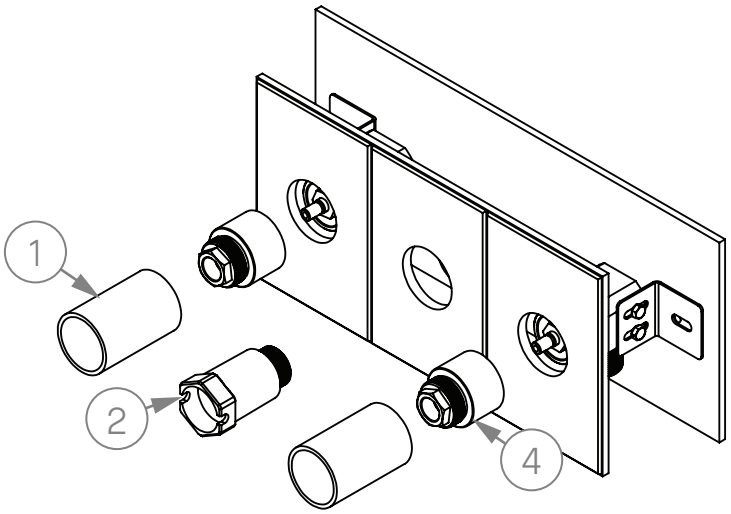

2. Unscrew the plastic covers (1 and 2) from rough in (3) and screw cartridge covers (4) on.

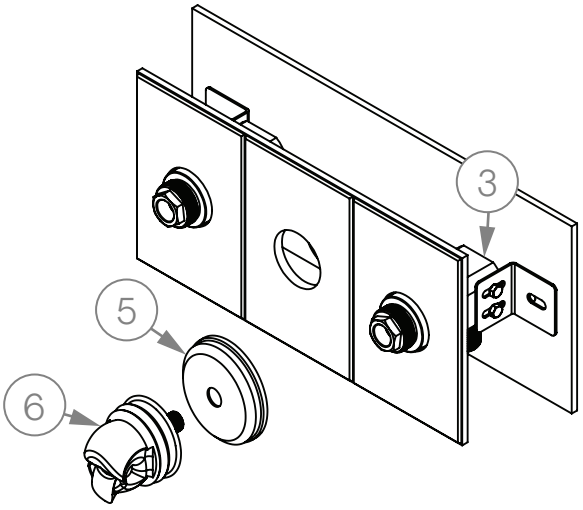

3. Apply suitable plumbers tape to the spout thread and screw shield and spout (5 and 6) into rough in (3).

INSTALLATION INSTRUCTIONS

DAD3052, DAD3053

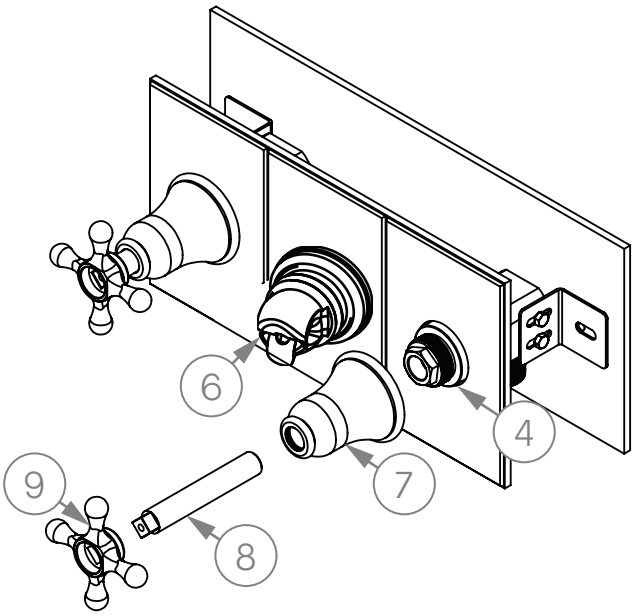

4. Level spout (6). Screw tap shield (7) into cartidge cover (4). Put tap spindle (8) into tap shield (7) and place classic handle (9) on the tap spindle (8).

5. Put washer (10) inside of the classic handle (9), tighten the bolt (11) and plug it with ceramic indices (12).

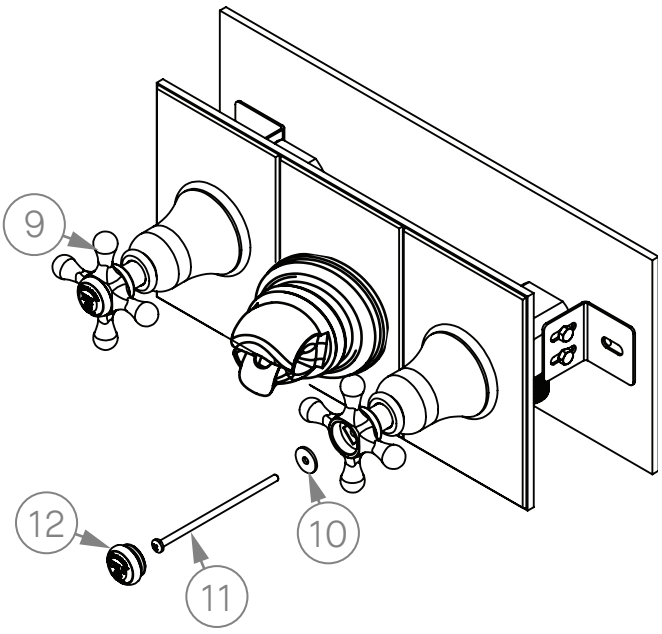

CARE AND MAINTENANCE

A Drummonds' Bathroom product is designed to give you years of faultless service and, if you follow the instructions below, will continue to look stunning for many years to come. All of Drummonds' Bathroom products are guaranteed for 1 year from the date of purchase against manufacturing defects. The guarantee does not cover faults caused by incorrect installation, neglect, misuse, wear & tear, inappropriate cleaning, or damage caused by the build-up of limescale. Please see Drummonds' T&Cs for further details of the product guarantee.

GENERAL USE

To help prevent limescale build up and water marks, all surfaces should be wiped dry after use. Only mild, nonabrasive cleaning products should be used followed by rinsing and drying with a soft cloth.

POLISHED BRASS PRODUCTS

All of Drummonds taps and fittings are made from 100% brass, which can be supplied in a polished finish that is not lacquered. Polished brass will tarnish very quickly, especially in the bathroom where it is exposed to moisture. If you wish to maintain a shiny brass finish, regular polishing with an appropriate metal polish such as Brasso will be required.

POLISHED CHROME AND NICKEL PRODUCTS

Wipe off any water marks after use with a soft cloth or towel. Clean on a regular basis with a mild non-abrasive bathroom cleaner, again taking care to dry the product with a soft cloth or towel. For stubborn stains, particularly in hard water areas, remove with Brasso. Nickel products will require periodic polishing with Brasso, otherwise they will develop an aged patina like silverware.

SHOWER HEADS AND ROSES

Clean and descale on a regular basis, paying particular attention to the holes in the shower head to ensure that they do not become blocked. Remove and clean the thermostatic cartridge on a periodic basis to prevent permanent damage from limescale.

CAST IRON BATHS AND SHOWER TRAYS

The interior of a Drummonds bath or shower tray is enamelled with dry frit vitreous enamel which is very hard wearing and durable. To maintain the soft shine on the surface of the enamel rinse the bath out after each use, making sure that you get rid of any gritty deposits. and then dry it with a soft cloth or towel. To remove marks or dirt use a non-abrasive bathroom cleaner which is safe for use on enamelled surfaces (please see the Vitreous Enamel Association website for guidance on suitable cleaners www.vea.org.uk). It is very important to ensure that a dripping, or leaking, tap is repaired immediately to prevent the enamel being permanently damaged.

BATH EXTERIOR

Caring for the exterior of your bath or shower tray is dependent on the finish of your bath:

- A raw, primed, or painted exterior does not require any maintenance, other than occasional cleaning to maintain the appearance. If the exterior becomes scratched, exposing the cast iron below, it must be treated immediately with a suitable rust inhibitor, followed by a metal primer and paint finish to seal the exterior.
- A polished or lacquered exterior is a beautiful finish, but it must be treated very carefully to avoid scratching especially when moving the bath into position. If the exterior does become scratched, please call Drummonds immediately so that we can advise on the best course of action, In general use, the polished exterior should simply be wiped down with a soft clean cloth. Never use any kind of bathroom cleaner on the exterior of your bath. Care should also be taken when cleaning the floor around the bath, particularly with a skirted bath, not to allow floor cleaner to splash or rub on the bath, as it may damage the lacquer which protects the bath from rusting.

CHINA SANITARYWARE

Clean on a regular basis with a mild, non-abrasive bathroom cleaner to prevent the buildup of dirt and limescale. Ensure that dripping taps are repaired quickly to avoid the surface of the China becoming stained.

MARBLE VANITY BASINS

A Drummonds' marble vanity basin is a natural product which is hand polished and sealed in the factory. Clean the surface of the marble after use with a soft cloth, making sure that you dry the surface to prevent watermarks from developing on the marble. We would recommend Lithofin Easy Care which is a daily cleaner/conditioner designed for natural stones. under no circumstances use any kind of bathroom cleaner or limescale remover on the surface of the marble. To prevent staining, it is important to ensure that any cosmetics, including shampoo, are wiped off the surface immediately.

WOODEN LOO SEATS

Clean after use with a damp soft (non-abrasive) cloth and dry immediately. Never use a bathroom cleaner on your loo seat as this is likely to strip off the varnish invalidating the guarantee. Use a high-quality furniture wax polish occasionally such as Mylands Wax - Natural and apply in accordance with the manufacturers' instructions. Under no circumstance stand on your loo seat. Replace bumpers when perished as these can mark and stain the toilet seat.